ATLAS

SINCE 1919

STABLE. STRONG. STEADY.

- 15.6 - 17.3 t
- 95 kW (130 HP)
- 0.7 - 1.1 m^3

WHEELED EXCAVATOR 150W

WWW.ATLASGMBH.COM

TECHNICAL INFORMATION 150W

Technical Information

ENGINE

Power rating.....95 kW (130 hp)	Cylinder capacity.....4038 cm^3	Air filter .....Dry air filter
RPM.....1800/min	Number of cylinders.....4	Battery.....2x 12V 2x100 Ah
Make/model.....Deutz TCD 4.1 (Tier 4 Final)	Borehole/lift 101/126	Alternator .....24V / 100 Ah
Design .....Turbocharger/LLK	Cooling system .....Water-cooled	Starter .....24 V / 4 kW

HYDRAULIC SYSTEM

• AWE 5 system (Load sensing)	• Suction valves for all work functions	• 2 additional circuits for additional consumer loads possible
• Load limit controlled high-performance pump	• Load-retaining and fine lowering valves in lifting circuit	• Max. oil flow.....240 l/min
• Fuel-efficient flow-on-demand control	• Pipe break protection valves for lifting and articulated cylinders	• Max. operating pressure .....350 bar
• Sensitive, proportional, independent control	• Grab / grab-rotating function equipped as standard	• Operating modes: 3 pre-programmed modes (Fine, Eco, Power)
• Primary and secondary protection against overload		

SWING ASSEMBLY

A hydrostatic drive with a 2-tier planetary gear and an axial piston motor acts like a wear-resistant service brake. Additional spring-mechanism multi-disc brake as a parking brake.	Axial piston motor with priority valve	• Max. swing speed 9/min
	Planetary transmission	• Swing torque..... 41 kNm
	Automatically controlled multi-disc brake	

TRACTION DRIVE AND BRAKES

• Variable displacement motor	• Automotive drive and cruise control:	• Tractive force .....92.7 kN
• Power-shift transmission	• Maximum speed .....20 km/h	• Max. gradeability 60%
• Double-acting brake valve	• Terrain speed .....5 km/h	• Dual circuit brake system .....Multi-disc
• Driving direction pre-selection via buttons in joystick	• Crawling speed .....1 km/h	• Parking brake .....Multi-disc
	• High-speed option .....35 km/h	• ZF axles

UNDERCARRIAGE

• 28 t special excavator axles	• 8 tyres .....10.00 - 20	• 4 tyres (optional) .....710 - 22.5
• Steering axle with automatic oscillating axle blocking		

FILL CAPACITIES

• Fuel tank ..... 301 litres	• Engine oil ..... 10 litres	• Hydraulics system ..... 220 litres
• Cooling system ..... 35 litres	• Hydraulic tank ..... 180 litres	• Ad Blue® ..... 32 litres

DRIVER´S CAB

• Meets latest safety standards ROPS	**CONTROL:**	**CLIMATE CONTROL:**
• Extra large entry zone	• Ergonomic joysticks with proportional slide control	• Air conditioning with Climatronic
• Spacious leg room	• Slim steering column, height and tilt adjustable	• Very good air distribution through optimally arranged nozzles
• Excellent circumferential visibility	• Indicators, controls and operating switches are clearly arranged	
• Preparation for radio installation with mute function		**SOUND LEVELS:**
		• ISO 6396 (L_pA) in driver's cab.....72 dB(A)
DRIVER'S SEAT:	**MONITORING:**	• 2000/14EG (L_wA) ambience level....97 dB(A)
• Air-cushioned comfort seat (optional seat heating)	• Operating data appears display	
• Arm rests and lumbar support	• Automatic system for monitoring, warning and storage of data	
• Seat adjustable separately from console		

WORKING EQUIPMENT 150W

Equipment

OPERATING WEIGHTS	Monoblock boom 4.32 m (C6.3M)		ADJUSTABLE BOOM Base arm 1.87 m (C6.41) Boom 3.10 m (C6.46)	
	Stick 2.15 m (D6.2)	Stick 2.65 m (D6.3)	Stick 2.15 m (D6.2)	Stick 2.65 m (D6.3)
Support dozer blade	15.3 t	15.4 t	15.6 t	15.7 t
blade / outriggers	16.3 t	16.4 t	16.7 t	16.8 t
4 support outriggers	16.5 t	16.6 t	16.9 t	17.0 t

Operating weight with driver, completely filled implement and 1 ton for attachments.

EQUIPMENT

BASIC DEVICE Atlas 150W (can be combined)

- Wheel excavator 150W with support and dozer blade (SDB) and 2 lifting cylinders (A 5.2)
- Wheel excavator 150W with quadruple claw support and 2 lifting cylinders (A 5.32)
- Wheel excavator 150W with blade on rigid axle, 2 outriggers on steering axle and 2 lifting cylinders (A 5.33)
- Wheel excavator 150W with blade on steering axle, 2 outriggers on rigid axle and 2 lifting cylinders (A 5.35)

SDB = support and dozer blade

Boom:

- Monoblock boom with stick cylinder 4.32 m (C 6.3M)
- Adjustable boom consisting of the base arm 1.87 m (C 6.41) with adjustable cylinder and boom 3.10 m (C 6.46) with stick cylinder

Sticks:

- Stick 2.15 m (D 6.2)
- Stick 2.65 m (D 6.3)

Bucket tipping cylinder:

- Bucket tipping cylinder with bucket linkage (F 6.1)

Standard equipment

Engine:

- Automatic idle
- Diesel pre-filter
- Engine monitoring
- Cold start assistance

Hydraulics:

- Proportional grab/grab rotating function
- Accumulator for emergency lowering of the arm system
- Pipe break protection valves for lifting and articulated cylinders
- Max. load-limit control
- Cylinder end-position damping

Cab:

- Air conditioning with Climatronic
- Preparation for radio installation with mute function
- Slim steering column, height and tilt adjustable
- Ready for electric cooling box
- Different options for storage, compartment for documents
- Seat adjustable separately from console
- Rear view security camera
- Heat-absorbing glass, tinted windows
- Automotive drive and cruise control
- Operating data display screen
- Bottle holder

Equipment:

- Joint bearings in stick and bucket cylinders
- Combined lubricating points for swing bearing and arm equipment

Undercarriage:

- Power-shift transmission
- Wet disc brakes
- Tool box in the undercarriage

ADDITIONAL EQUIPMENT

Engine:

- Refueling pump
- Engine speed adjustment via potentiometer
- Auxiliary heating

Hydraulics:

- Hydraulic kit, to operate front and rear supports separately
- Hydraulic kit, to operate supports per axle separately
- Biodegradable oil
- 270° camera system

Equipment:

- Automatically controlled and monitored electric central lubrication system for uppercarriage and arm equipment

Cab:

- Cab protection guard
- Beacon light
- Heated driver's seat
- Radio CD/MP3, front AUX in, USB
- Joystick steering
- Electric cooling box
- LED working-lights
- Cab elevation
- GPS/GSM telemetric system for monitoring of operating data, consumption, position
- Proportional control of supports by slide in joystick

Undercarriage:

- Wide axles (overall width 2750 mm)
- Wide dozer blade (overall width 2750 mm)
- High-speed option 37 km/h
- Gear protection
- Wheel cover

Other special equipment: See price list

ATTACHMENTS (SELECTION)

	Bucket F415	Bucket F416	Bucket F417	Bucket F648
Capacity SAE	0.67 m³	0.82 m³	0.92 m³	1.12 m³
Cutting width	850 mm	1000 mm	1100 mm	1300 mm

WORK AREAS 150W

Work Areas Monoblock boom 4.32 m (C6.3M)

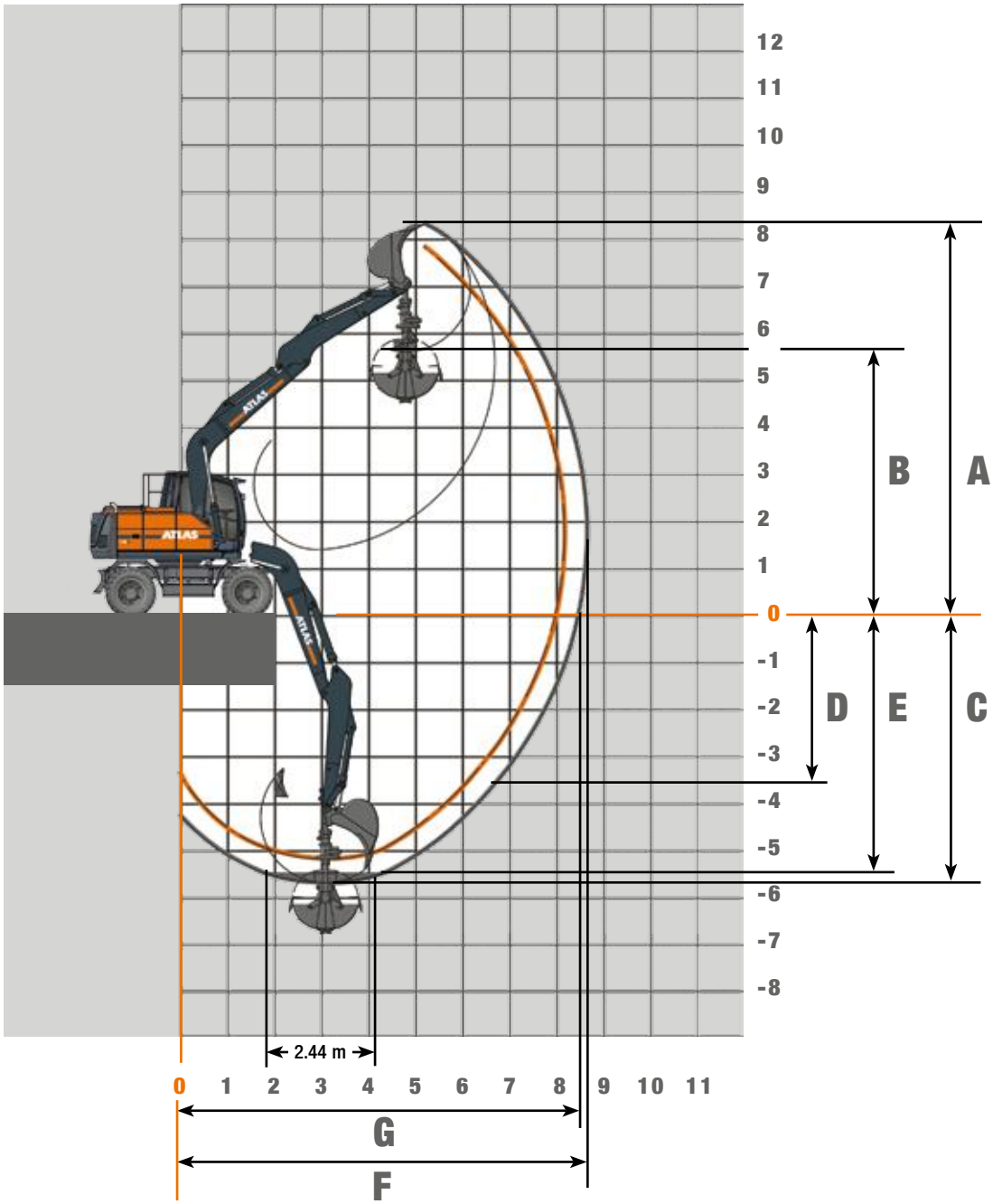

STICK LENGTHS	2.15 m (D6.2)	2.65 m (D6.3)
A Max. cut-in height	8.10 meters	8.35 meters
B Max. pouring height	5.35 meters	5.65 meters
C Max. trench depth	5.20 meters	5.70 meters
D Max. vertical tapping depth	3.00 meters	3.55 meters
E Max. trench depth with 2.44-metre-wide base	4.95 meters	5.50 meters
F Max. reach	8.20 meters	8.70 meters
G Max. reach in the standing plane	8.05 meters	8.50 meters
Max. bucket digging force	130 kN	130 kN
Max. stick digging force	82 kN	72 kN

Unit is equipped with monoblock boom 4.32 m (C6.3M).

Lifting Capacities Monoblock boom 4.32 m (C6.3M)

Lifting Capacities Monoblock boom 4.32 m (C6.3 M) with Stick 2.15 m (D6.2). Max. Reach 8.20 m

Height		Undercarriage type	2.5 m	3.0 m	3.5 m	4.0 m	4.5 m	5.0 m	5.5 m	6.0 m	6.5 m
+ 5.0 m	FRONT	SDB rear, supported						4226	4195		
		SDB front, raised						4226	4195		
	LATERAL	SDB supported						4226	4183*		
		SDB raised						4226	3694*		
+ 4.0 m	FRONT	SDB rear, supported					4729	4504	4338	4228	
		SDB front, raised					4729	4504	4338	4228	
	LATERAL	SDB supported					4729	4504	4138*	3635*	
		SDB raised					4729	4193*	3651*	320	
+ 3.0 m	FRONT	SDB rear, supported			6809	5963	5382	4964	4652	4418	4251
		SDB front, raised			6809	5963	5382	4964	4652	4418	4251
	LATERAL	SDB supported			6809	5963	5382	4636*	4051*	3579*	3185*
		SDB raised			6711*	5555*	4713*	4072*	3566*	3154*	2808*
+ 2.0 m	FRONT	SDB rear, supported			8168	6915	6067	5460	5008	4660	4386
		SDB front, raised			8168	6915	6067	5460	5008	4660	4386
	LATERAL	SDB supported			7377*	6112*	5194*	4497*	3949*	3507*	3139*
		SDB raised			6338*	5299*	4529*	3937*	3467*	3084*	2763*
+ 1.0 m	FRONT	SDB rear, supported			8919	7551	6570	5844	5289	4849	4480
		SDB front, raised			8919	7551	6570	5844	5289	4849	4473*
	LATERAL	SDB supported			7126*	5913*	5040*	4379*	3860*	3440*	3094*
		SDB raised			6099*	5108*	4381*	3823*	3380*	3019*	2719*
+ 0 m	FRONT	SDB rear, supported		7473	9006	7733	6759	5999	5392	4885	4143
		SDB front, raised		7473	9006	7733	6759	5999	5392	4885	4143
	LATERAL	SDB supported		7473	7026*	5807*	4947*	4302*	3799*	3398*	3075*
		SDB raised		7473	6005*	5007*	4291*	3749*	3321*	2978*	2701*
- 1.0 m	FRONT	SDB rear, supported	8120	9990	8609	7495	6594	5853	5219	4614	
		SDB front, raised	8120	9990	8609	7495	6594	5853	5219	4614	
	LATERAL	SDB supported	8120	8936*	7032*	5795*	4928*	4285*	3790*	3404*	
		SDB raised	8120	7541*	6010*	4995*	4273*	3732*	3313*	2984*	
- 2.0 m	FRONT	SDB rear, supported	10191	8825	7706	6768	5961	5228	4445		
		SDB front, raised	10191	8825	7706	6768	5961	5228	4445		
	LATERAL	SDB supported	10191	8825	7099*	5845*	4968*	4326*	3846*		
		SDB raised	10191	7631*	6074*	5043*	4312*	3772*	3367*		
- 3.0 m	FRONT	SDB rear, supported	7787	6855	6019	5220	4339				
		SDB front, raised	7787	6855	6019	5220	4339				
	LATERAL	SDB supported	7787	6855	6019	5220	4339				
		SDB raised	7787	6855	6019	5165*	4339				

Lifting Capacities Monoblock boom 4.32 m (C6.3M) with Stick 2.65 m (D6.3). Max. Reach 8.70 m

Height		Undercarriage type	2.5 m	3.0 m	3.5 m	4.0 m	4.5 m	5.0 m	5.5 m	6.0 m	6.5 m	7.0 m
+ 5.0 m	FRONT	SDB rear, supported							3748	3762	1902	
		SDB front, raised							3748	3762	1902	
	LATERAL	SDB supported							3748	3713*	1902	
		SDB raised							3748	3283*	1902	
+ 4.0 m	FRONT	SDB rear, supported						4075	3958	3870	3817	
		SDB front, raised						4075	3958	3870	3817	
	LATERAL	SDB supported						4075	3958	3678*	3256*	
		SDB raised						4075	3697*	3249*	2876*	
+ 3.0 m	FRONT	SDB rear, supported				5351	4904	4571	4317	4120	3969	3152
		SDB front, raised				5351	4904	4571	4317	4120	3969	3152
	LATERAL	SDB supported				5351	4904	4571	4087*	3606*	3209*	2872*
		SDB raised				5351	4782*	4119*	3599*	3179*	2830*	2532*
+ 2.0 m	FRONT	SDB rear, supported			7464	6394	5660	5129	4729	4420	4176	3896
		SDB front, raised			7464	6394	5660	5129	4729	4420	4176	3896
	LATERAL	SDB supported			7464	6192*	5245*	4529*	3970*	3519*	3146*	2832*
		SDB raised			6458*	5372*	4576*	3967*	3485*	3094*	2769*	2493*
+ 1.0 m	FRONT	SDB rear, supported			8523	7212	6287	5607	5091	4685	4356	4027
		SDB front, raised			8523	7212	6287	5607	5091	4685	4356	4024*
	LATERAL	SDB supported			7172*	5943*	5057*	4387*	3860*	3436*	3085*	2790*
		SDB raised			6141*	5135*	4396*	3829*	3379*	3013*	2709*	2452*
+ 0 m	FRONT	SDB rear, supported		7828	8936	7618	6638	5891	5305	4831	4427	2926
		SDB front, raised		7828	8936	7618	6638	5891	5305	4831	4418*	2926
	LATERAL	SDB supported		7828	6995*	5789*	4930*	4284*	3779*	3373*	3039*	2767*
		SDB raised		7435*	5972*	4987*	4273*	3729*	3300*	2952*	2664*	2430*
- 1.0 m	FRONT	SDB rear, supported		10073	8813	7598	6655	5906	5293	4769	4270	
		SDB front, raised		10073	8813	7598	6655	5906	5293	4769	4270	
	LATERAL	SDB supported		8813*	6946*	5730*	4872*	4234*	3740*	3348*	3034*	
		SDB raised		7423*	5927*	4930*	4217*	3681*	3263*	2928*	2659*	
- 2.0 m	FRONT	SDB rear, supported	10511	9541	8197	7139	6281	5560	4923	4279		
		SDB front, raised	10511	9541	8197	7139	6281	5560	4923	4279		
	LATERAL	SDB supported	10511	8879*	6983*	5750*	4885*	4246*	3758*	3379*		
		SDB raised	10028*	7485*	5961*	4950*	4230*	3693*	3280*	2958*		
- 3.0 m	FRONT	SDB rear, supported	9333	8003	6953	6076	5298	4539				
		SDB front, raised	9333	8003	6953	6076	5298	4539				
	LATERAL	SDB supported	9333	8003	6953	5839*	4965*	4329*				
		SDB raised	9333	7618*	6064*	5034*	4307*	3773*				

The specified max. loading capacities in kilogrammes (kg) include a stability of 25% or are calculated at 87% of the hydraulic lifting power, as per ISO10567. These values are applicable at the tip of the arm with optimum positioning of the corresponding arm system. Weights of attached load carrying accessories (grab, magnet, load hook, etc.) are not included with the load carrying values. *Value limited due to excavator stability.

WORK AREAS 150W

Work Areas Adjustable Boom, Base arm 1.87 m (C6.41) and Boom 3.10 m (C6.46)

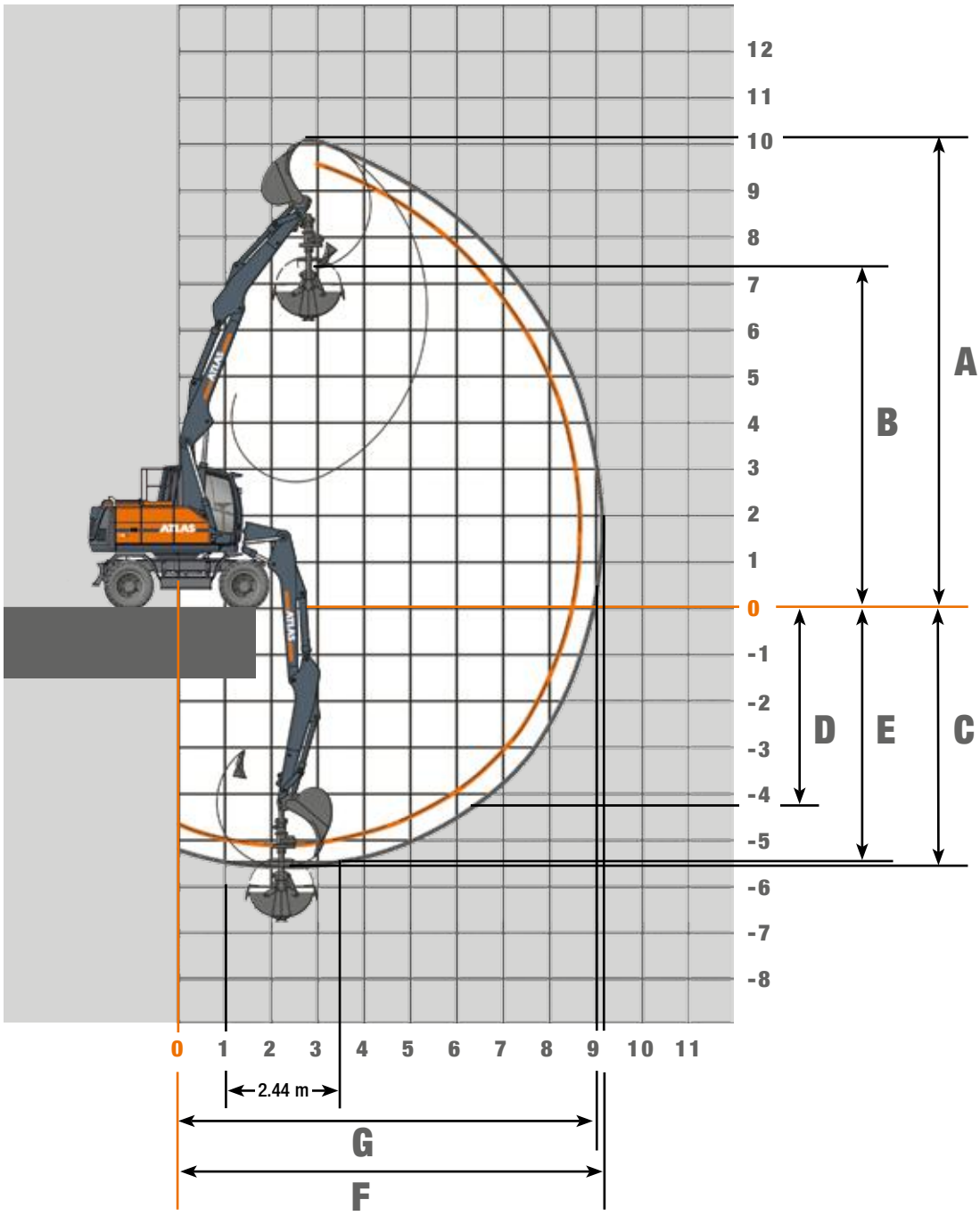

STICK LENGTHS	2.15 m (D6.2)	2.65 m (D6.3)
A Max. cut-in height	9.70 meters	10.10 meters
B Max. pouring height	6.95 meters	7.35 meters
C Max. trench depth	5.10 meters	5.60 meters
D Max. vertical tapping depth	3.80 meters	4.30 meters
E Max. trench depth with 2.44-metre-wide base	5.00 meters	5.50 meters
F Max. reach	8.70 meters	9.20 meters
G Max. reach in the standing plane	8.55 meters	9.05 meters
Max. bucket digging force	130 kN	130 kN
Max. stick digging force	82 kN	72 kN

Unit is equipped with standard adjustable boom: base arm 1.87 m (C6.41) and boom 3.10 m (C6.46).

Lifting Capacities Adjustable Boom, Base arm 1.87 m (C6.41) and Boom 3.10 m (C6.46)

Lifting Capacities Adjustable Boom: Base arm 1.87 m (C6.41) and Boom 3.10 m (C6.46) with Stick 2.15 m (D6.2). Max. Reach 8.70 m

Height	Undercarriage type		2.5 m	3.0 m	3.5 m	4.0 m	4.5 m	5.0 m	5.5 m	6.0 m	6.5 m	7.0 m
+ 6.0 m	FRONT	SDB rear, supported		5379	5440	5095	4826	4616	4463			
		SDB front, raised		5379	5440	5095	4826	4616	4463			
	LATERAL	SDB supported		5379	5440	5095	4826	4616	4156*			
		SDB raised		5379	5440	5095	4826	4264*	3668*			
+ 5.0 m	FRONT	SDB rear, supported	5060	5667	5860	5420	5035	4729	4484	4291	3873	
		SDB front, raised	5060	5667	5860	5420	5035	4729	4484	4291	3873	
	LATERAL	SDB supported	5060	5667	5860	5420	5035	4729	4154	3651*	3155*	
		SDB raised	5060	5667	5860	5420	4903	4239*	3716	3223*	2776*	
+ 4.0 m	FRONT	SDB rear, supported	7451	7746	6843	6047	5467	5024	4675	4395	4166	
		SDB front, raised	7451	7746	6843	6047	5467	5024	4675	4395	4166	
	LATERAL	SDB supported	7451	7746	6843	6047	5403*	4675*	4115*	3662*	3196*	
		SDB raised	7451	7746	6797*	5649*	4813*	4184*	3687*	3253*	2816*	
+ 3.0 m	FRONT	SDB rear, supported	7391	7638	7554	6811	5993	5392	4929	4561	4257	3994
		SDB front, raised	7391	7638	7554	6811	5993	5392	4929	4561	4257	3994
	LATERAL	SDB supported	7391	7638	7481*	6215*	5302*	4612*	4072*	3643*	3189*	2793*
		SDB raised	7391	7638	6612*	5528*	4734	4127*	3656*	3239*	2809*	2453*
+ 2.0 m	FRONT	SDB rear, supported	8918	8725	8211	7380	6415	5699	5146	4704	4335	4007
		SDB front, raised	8918	8725	8211	7380	6415	5699	5146	4704	4335	3988
	LATERAL	SDB supported	8918	8725	7361*	6127*	5238	4571*	4050*	3612*	3147*	2766*
		SDB raised	8918	8078*	6520*	5454*	4680*	4100*	3650*	3183*	2768*	2426*
+ 1.0 m	FRONT	SDB rear, supported	10340	9574	8637	7499	6554	5818	5228	4745	4343	4009
		SDB front, raised	10340	9574	8637	7499	6554	5818	5228	4745	4343	3954*
	LATERAL	SDB supported	10340	9230*	7360*	6116*	5231*	4578*	4077*	3523*	3080*	2722*
		SDB raised	10340	8081*	6513*	5445*	4684*	4114*	3587*	3096*	2703*	2384*
+ 0 m	FRONT	SDB rear, supported	12222	10494	8812	7523	6565	5825	5236	4763	4382	3763
		SDB front, raised	12222	10494	8812	7523	6565	5825	5236	4763	4382	3763
	LATERAL	SDB supported	12222	9321	7431*	6182*	5266*	4550*	3935*	3418*	3008*	2688*
		SDB raised	10631*	8053*	6469*	5387*	4594*	3984*	3450*	2995*	2632*	2351*
- 1.0 m	FRONT	SDB rear, supported	13514	10753	8912	7607	6640	5901	5349	4766	3982	
		SDB front, raised	13514	10753	8912	7607	6640	5901	5349	4766	3982	
	LATERAL	SDB supported	12601*	9286*	7344*	6062*	5147*	4404*	3802*	3332*	2969*	
		SDB raised	10427*	7860*	6300*	5245*	4479*	3844*	3320*	2911*	2594*	
- 2.0 m	FRONT	SDB rear, supported	13813	11003	9158	7855	6786	5841	4889	3701		
		SDB front, raised	13813	11003	9158	7855	6786	5841	4889	3701		
	LATERAL	SDB supported	12543*	9216*	7278*	5974*	4997*	4281*	3735*	3313*		
		SDB raised	10374*	7794*	6237*	5160*	4335*	3724*	3255*	2892*		

Lifting Capacities Adjustable Boom: Base arm 1.87 m (C6.41) and Boom 3.10 m (C6.46) with Stick 2.65 m (D6.3). Max. Reach 9.20 m

Height	Undercarriage type		2.5 m	3.0 m	3.5 m	4.0 m	4.5 m	5.0 m	5.5 m	6.0 m	6.5 m	7.0 m	7.5 m
+ 6.0 m	FRONT	SDB rear, supported			4334	4515	4407	4239	4103	4001			
		SDB front, raised			4334	4515	4407	4239	4103	4001			
	LATERAL	SDB supported			4334	4515	4407	4239	4103	3690*			
		SDB raised			4334	4515	4407	4239	3754*	3265*			
+ 5.0 m	FRONT	SDB rear, supported		3957	4449	4648	4637	4391	4187	4017	3879	3132	
		SDB front, raised		3957	4449	4648	4637	4391	4187	4017	3879	3132	
	LATERAL	SDB supported		3957	4449	4648	4637	4391	4173*	3691	3266*	2845*	
		SDB raised		3957	4449	4648	4637	4267*	3733*	3304*	2887*	2504*	
+ 4.0 m	FRONT	SDB rear, supported	5224	5553	5732	5558	5083	4710	4411	4164	3959	3786	
		SDB front, raised	5224	5553	5732	5558	5083	4710	4411	4164	3959	3786	
	LATERAL	SDB supported	5224	5553	5732	5558	5083	4693*	4120*	3659	3282*	2877*	
		SDB raised	5224	5553	5732	5558	4838*	4195*	3689*	3282*	2909*	2537*	
+ 3.0 m	FRONT	SDB rear, supported	7216	7569	7357	6358	5649	5117	4703	4371	4096	3861	3650
		SDB front, raised	7216	7569	7357	6358	5649	5117	4703	4371	4096	3861	3631*
	LATERAL	SDB supported	7216	7569	7357	6230*	5308*	4605	4057*	3620*	3266*	2869*	2527*
		SDB raised	7216	7569	6644*	5538*	4729*	4118	3639*	3253*	2895*	2529*	2218*
+ 2.0 m	FRONT	SDB rear, supported	9000	8792	8133	7069	6165	5495	4979	4566	4226	3934	3665
		SDB front, raised	9000	8792	8133	7069	6165	5495	4979	4566	4226	3934	3607*
	LATERAL	SDB supported	9000	8792	7336*	6105*	5212*	4539*	4017*	3597	3227*	2834*	2503*
		SDB raised	9000	8045*	6487	5426*	4655*	4065*	3606*	3243	2850*	2492*	2194*
+ 1.0 m	FRONT	SDB rear, supported	9804	9227	8484	7409	6454	5722	5146	4679	4288	3949	3655
		SDB front, raised	9804	9227	8484	7409	6454	5722	5146	4679	4288	3938*	3570*
	LATERAL	SDB supported	9804	9124*	7286*	6054*	5174	4515*	4010*	3613*	3153*	2776*	2463*
		SDB raised	9804	7991	6437*	5389	4625	4052*	3612*	3190*	2774*	2435*	2154*
+ 0 m	FRONT	SDB rear, supported	11381	10082	8684	7421	6479	5747	5162	4685	4292	3973	3446
		SDB front, raised	11381	10082	8684	7421	6479	5747	5162	4685	4292	3935*	3446
	LATERAL	SDB supported	11381	9181	7314*	6079*	5206*	4556	4010*	3494*	3059*	2709*	2429*
		SDB raised	10617*	8044*	6479*	5419	4632*	4014*	3521*	3067*	2681*	2369*	2121*
- 1.0 m	FRONT	SDB rear, supported	12927	10568	8760	7477	6522	5785	5203	4752	4326	3707	
		SDB front, raised	12927	10568	8760	7477	6522	5785	5203	4752	4326	3707	
	LATERAL	SDB supported	12485	9307*	7361*	6074*	5155*	4461*	3869*	3371*	2973*	2664*	
		SDB raised	10440*	7876*	6314*	5255*	4485*	3897*	3384*	2947*	2597*	2325*	
- 2.0 m	FRONT	SDB rear, supported	13520	10753	8917	7619	6670	5959	5285	4569	3652		
		SDB front, raised	13520	10753	8917	7619	6670	5959	5285	4569	3652		
	LATERAL	SDB supported	12473*	9169*	7240*	5972*	5065*	4312*	3738*	3291*	2941*		
		SDB raised	10306*	7748*	6198*	5157*	4398*	3752*	3257*	2870*	2565*		

The specified max. loading capacities in kilogrammes (kg) include a stability of 25% or are calculated at 87% of the hydraulic lifting power, as per ISO10567. These values are applicable at the tip of the arm with optimum positioning of the corresponding arm system. Weights of attached load carrying accessories (grab, magnet, load hook, etc.) are not included with the load carrying values. *Value limited due to excavator stability.

WORK AREAS 150W

Work Areas Adjustable Boom, Base arm 1.87 m (C6.41) and Boom 3.62 m (C6.461)

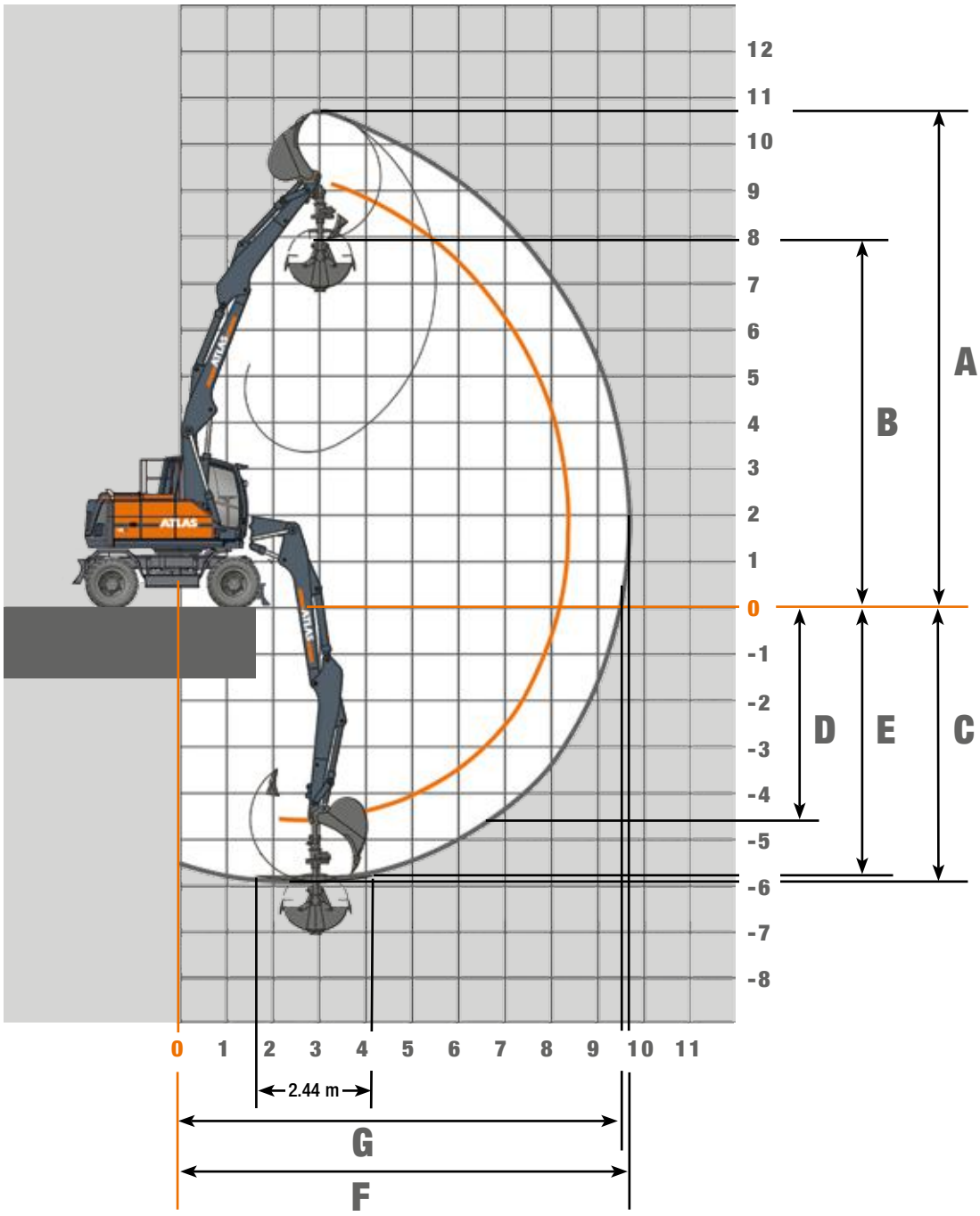

STICK LENGTHS	2.15 m (D6.2)	2.65 m (D6.3)
A Max. cut-in height	10.30 meters	10.75 meters
B Max. pouring height	6.45 meters	7.95 meters
C Max. trench depth	5.35 meters	5.96 meters
D Max. vertical tapping depth	4.10 meters	4.70 meters
E Max. trench depth with 2.44-metre-wide base	5.20 meters	5.80 meters
F Max. reach	8.25 meters	9.75 meters
G Max. reach in the standing plane	8.10 meters	9.60 meters
Max. bucket digging force	130 kN	130 kN
Max. stick digging force	82 kN	72 kN

Unit is equipped with standard adjustable boom: base arm 1.87 m (C6.41) and boom 3.62 m (C6.461).

Lifting Capacities Adjustable Boom, Base arm 1.87 m (C6.41) and Boom 3.62 m (C6.461)

Lifting capacites Adjustable boom: Base arm 1.87 m (C6.41) and boom 3.62 m (C6.461) with stick 2.15 m (D6.2). Max reach 8.70 m

Height	Undercarriage type		2.5 m	3.0 m	3.5 m	4.0 m	4.5 m	5.0 m	5.5 m	6.0 m	6.5 m	7.0 m	7.5 m
+ 6.0 m	FRONT	SDB rear, supported			5424	4989	4646	4374	4155	3985	3880		
		SDB front, raised			5424	4989	4646	4374	4155	3985	3880		
	LATERAL	SDB supported			5424	4989	4646	4374	4112*	3618*	3113*		
		SDB raised			5424	4989	4646	4212*	3674*	3198*	2730*		
+ 5.0 m	FRONT	SDB rear, supported		6246	6035	5411	4939	4571	4276	4037	3842	3693	
		SDB front, raised		6246	6035	5411	4939	4571	4276	4037	3842	3693	
	LATERAL	SDB supported		6246	6035	5411	4939	4571	4070*	3606*	3203*	2771*	
		SDB raised		6246	6035	5411	4797	4149*	3640*	3226*	2818*	2427*	
+ 4.0 m	FRONT	SDB rear, supported		6038	6473	6073	5396	4891	4499	4185	3928	3714	3533
		SDB front, raised		6038	6473	6073	5396	4891	4499	4185	3928	3714	3533
	LATERAL	SDB supported		6038	6473	6073	5246*	4549	4007*	3564*	3203*	2809*	2446*
		SDB raised		6038	6473	5479*	4676*	4069*	3589*	3196*	2845*	2465*	2136*
+ 3.0 m	FRONT	SDB rear, supported		5913	6307	6344	5887	5240	4748	4360	4043	3777	3542
		SDB front, raised		5913	6307	6344	5887	5240	4748	4360	4043	3777	3541*
	LATERAL	SDB supported		5913	6307	5979*	5119	4463*	3944*	3527*	3186*	2803*	2453*
		SDB raised		5913	6307	5317*	4566*	3989*	3536*	3168*	2833*	2459*	2142*
+ 2.0 m	FRONT	SDB rear, supported	6941	7225	7110	6722	6207	5490	4935	4493	4129	3820	3542
		SDB front, raised	6941	7225	7110	6722	6207	5490	4935	4493	4129	3820	3529*
	LATERAL	SDB supported	6941	7225	7069*	5894*	5046*	4405	3907*	3505*	3168*	2765*	2430*
		SDB raised	6941	7225	6255*	5243	4505*	3946	3505*	3160*	2784*	2421*	2119*
+ 1.0 m	FRONT	SDB rear, supported	7072	8254	7777	7104	6242	5543	4983	4523	4139	3815	3551
		SDB front, raised	7072	8254	7777	7104	6242	5543	4983	4523	4139	3815	3507*
	LATERAL	SDB supported	7072	8254	7083*	5889	5038*	4401*	3910*	3536*	3088*	2704*	2388*
		SDB raised	7072	7776*	6261*	5239	4497*	3948*	3521*	3126*	2706*	2362*	2078*
+ 0 m	FRONT	SDB rear, supported	9149	9544	8393	7186	6262	5552	4988	4529	4153	3861	3394
		SDB front, raised	9149	9544	8393	7186	6262	5552	4988	4529	4153	3861	3394
	LATERAL	SDB supported	9149	9003	7156*	5942*	5085	4453*	3915*	3430*	2992*	2635*	2351*
		SDB raised	9149	7753*	6251*	5224*	4471*	3891*	3426*	3002*	2613*	2295*	2043*
- 1.0 m	FRONT	SDB rear, supported	12517	10317	8533	7270	6333	5614	5048	4616	4221	3640	
		SDB front, raised	12517	10317	8533	7270	6333	5614	5048	4616	4221	3640	
	LATERAL	SDB supported	12227*	9014*	7138*	5902*	5020*	4356*	3803*	3303*	2899*	2584*	
		SDB raised	10070*	7594*	6095*	5084*	4351*	3791*	3316*	2878*	2522*	2245*	
- 2.0 m	FRONT	SDB rear, supported	13226	10509	8706	7430	6495	5817	5171	4489	3632		
		SDB front, raised	13226	10509	8706	7430	6495	5817	5171	4489	3632		
	LATERAL	SDB supported	12199*	8958*	7073*	5839*	4968*	4245*	3664*	3214*	2861*		
		SDB raised	10045*	7542*	6034*	5024*	4301*	3684*	3181*	2791*	2485*		

Lifting capacites Adjustable boom: Base arm 1.87 m (C6.41) and boom 3.62 m (C6.461) with stick 2.65 m (D6.3). Max reach 9.20 m

Height	Undercarriage type		2.5 m	3.0 m	3.5 m	4.0 m	4.5 m	5.0 m	5.5 m	6.0 m	6.5 m	7.0 m	7.5 m	8.0 m
+ 5.0 m	FRONT	SDB rear, supported			4489	4774	4595	4283	4027	3815	3638	3491	3373	
		SDB front, raised			4489	4774	4595	4283	4027	3815	3638	3491	3373	
	LATERAL	SDB supported			4489	4774	4595	4283	4027	3620*	3231*	2885*	2511*	
		SDB raised			4489	4774	4595	4183*	3662*	3241*	2894*	2540*	2198*	
+ 4.0 m	FRONT	SDB rear, supported		6276	6412	5630	5057	4618	4270	3989	3755	3558	3390	2778
		SDB front, raised		6276	6412	5630	5057	4618	4270	3989	3755	3558	3390	2778
	LATERAL	SDB supported		6276	6412	5630	5057	4567*	4011*	3567*	3199*	2891*	2543*	2223*
		SDB raised		6276	6412	5536*	4712*	4086*	3592*	3194*	2869*	2563*	2229*	1938*
+ 3.0 m	FRONT	SDB rear, supported		6044	6417	6376	5584	5000	4551	4193	3900	3655	3442	3248
		SDB front, raised		6044	6417	6376	5584	5000	4551	4193	3900	3655	3442	3232
	LATERAL	SDB supported		6044	6417	6002*	5126*	4458*	3931*	3509*	3162*	2874*	2537*	2228*
		SDB raised		6044	6376*	5338*	4569*	3986*	3521*	3149*	2841*	2552*	2224*	1943*
+ 2.0 m	FRONT	SDB rear, supported	7134	7311	7080	6737	6007	5320	4790	4370	4026	3737	3484	3249
		SDB front, raised	7134	7311	7080	6737	6007	5320	4790	4370	4026	3737	3484	3221*
	LATERAL	SDB supported	7134	7311	7025*	5862*	5019*	4374*	3871*	3469*	3138*	2854*	2501*	2206*
		SDB raised	7134	7311	6222*	5216*	4479*	3917*	3473*	3115*	2829*	2508*	2189*	1921*
+ 1.0 m	FRONT	SDB rear, supported	8017	7926	7571	7008	6172	5472	4914	4461	4084	3762	3483	3250
		SDB front, raised	8017	7926	7571	7008	6172	5472	4914	4461	4084	3762	3476	3183*
	LATERAL	SDB supported	8017	7926	6995*	5814*	4977	4344*	3849*	3462*	3155*	2782*	2446*	2167*
		SDB raised	8017	7662*	6177*	5167*	4442*	3890*	3459*	3117*	2804*	2437*	2134*	1883*
+ 0 m	FRONT	SDB rear, supported	9306	9015	8143	7067	6166	5468	4912	4457	4079	3762	3512	3123
		SDB front, raised	9306	9015	8143	7067	6166	5468	4912	4457	4079	3762	3498*	3123
	LATERAL	SDB supported	9306	8834	7037	5841*	4992*	4364*	3881	3490*	3073*	2692*	2381*	2131*
		SDB raised	9306	7736	6220*	5197*	4465	3915*	3445*	3058*	2690*	2349*	2071*	1848*
- 1.0 m	FRONT	SDB rear, supported	11528	9990	8366	7131	6213	5505	4944	4490	4124	3831	3377	
		SDB front, raised	11528	9990	8366	7131	6213	5505	4944	4490	4124	3831	3377	
	LATERAL	SDB supported	11528	8978*	7145*	5908*	5023*	4356*	3832*	3378*	2952*	2606*	2330*	
		SDB raised	10054*	7594*	6100*	5088*	4352*	3790*	3343*	2950*	2572*	2265*	2020*	
- 2.0 m	FRONT	SDB rear, supported	12904	10279	8510	7255	6323	5610	5070	4632	4131	3457		
		SDB front, raised	12904	10279	8510	7255	6323	5610	5070	4632	4131	3457		
	LATERAL	SDB supported	12109*	8901*	7032*	5804*	4934*	4283*	3719*	3239*	2860*	2556*		
		SDB raised	9958*	7486*	5992*	4989*	4266*	3719*	3233*	2814*	2482*	2216*		
- 3.0 m	FRONT	SDB rear, supported	13292	10597	8806	7554	6583	5735	4940	4102	3030			
		SDB front, raised	13292	10597	8806	7554	6583	5735	4940	4102	3030			
	LATERAL	SDB supported	12148*	8908*	7025*	5798*	4875*	4158*	3607*	3176*	2839*			
		SDB raised	9994*	7492*	5986*	4983*	4209*	3598*	3124*	2753*	2461*			

The specified max. loading capacities in kilogrammes (kg) include a stability of 25% or are calculated at 87% of the hydraulic lifting power, as per ISO10567. These values are applicable at the tip of the arm with optimum positioning of the corresponding arm system. Weights of attached load carrying accessories (grab, magnet, load hook, etc.) are not included with the load carrying values. *Value limited due to excavator stability.

DIMENSIONS 150W

Dimensions

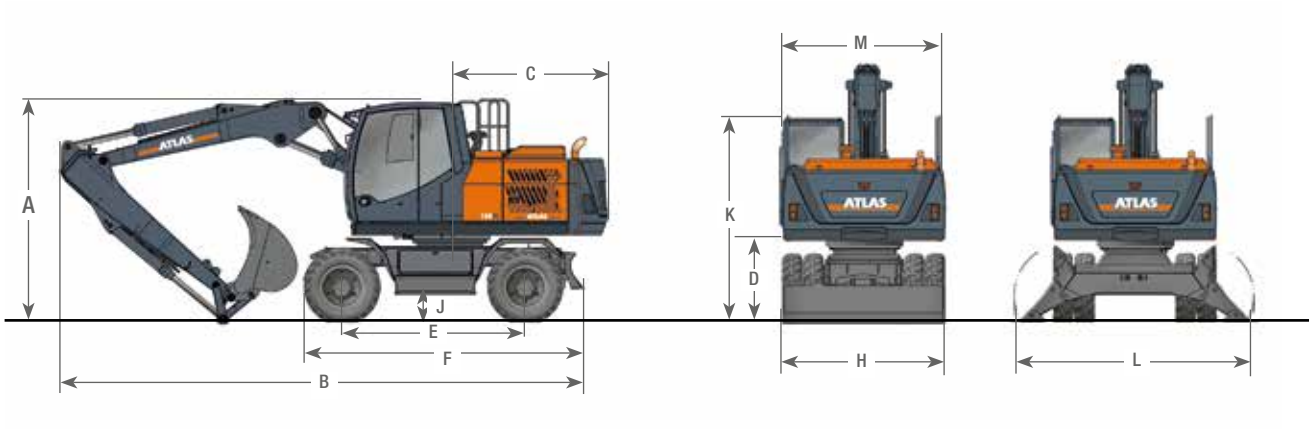

A	TRANSPORT HEIGHT (with bucket)			
	Adjustable boom* with stick 2.15 m	3.15 m	C	TAIL SWING RADIUS	2.24 m
	Adjustable boom* with stick 2.65 m	3.15 m	D	CLEARANCE UNDER COUNTERWEIGHT	1.27 m
	Monoblock boom 4.32 m with stick 2.15 m	3.15 m	E	WHEEL BASE	2.60 m
	Monoblock boom 4.32 m with stick 2.65 m	3.15 m	F	UNDERCARRIAGE LENGTH	4.08 m
B	TRANSPORT LENGTH		H	DOZER BLADE WIDTH	2.54 m
	Adjustable boom* with stick 2.15 m	7.76 m	J	GROUND CLEARANCE	0.45 m
	Adjustable boom* with stick 2.65 m	8.90 m	K	OVERALL HEIGHT OF CAB	3.15 m
	Monoblock boom 4.32 m with stick 2.15 m	7.60 m	L	OUTRIGGERS WIDTH (extended)	3.50 m
	Monoblock boom 4.32 m with stick 2.65 m	7.60 m	M	OVERALL WIDTH OF SUPERSTRUCTURE	2.49 m

* Adjustable boom: Base arm 1.87 m (C6.41) and boom 3.10 m (C6.46)

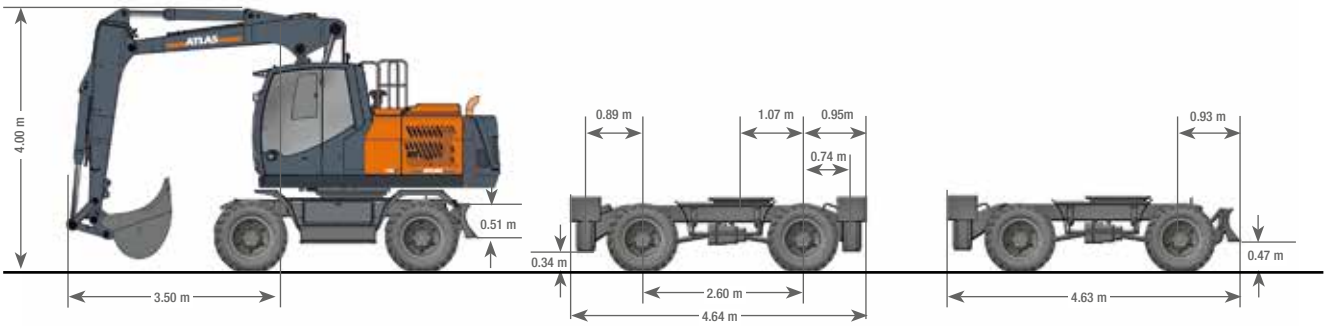

Road travel setup

Undercarriage with 4x outrigger support

Undercarriage with support combination
(Support dozer blade plus 2x outriggers)

WERK GANDERKESEE
Atlas GmbH
Atlasstraße 6
D-27777 Ganderkesee,
Germany

Tel.: +49 (0) 4222 954 0
Fax: +49 (0) 4222 954 220
E-mail: info@atlasgmbh.com
www.atlasgmbh.com

WERK VECHTA
Atlas GmbH
Theodor-Heuss-Str. 3
D-49377 Vechta
Germany

T: +49 (0) 4441 954 0
F: +49 (0) 4441 954 299
E-mail: info@atlasgmbh.com
www.atlasgmbh.com

WERK DELMENHORST
Atlas GmbH
Stedinger Straße 324
D-27751 Delmenhorst
Germany

T: +49 (0) 4221 49 10
F: +49 (0) 4221 49 14 43
E-mail: info@atlasgmbh.com
www.atlasgmbh.com

ATLAS CRANES UK LTD
LADEKRANE
Wharfedale Road,
Euroway Trading Est.
Bradford, England BD4 6SL
United Kingdom
T: +44 8444 99 66 88
F: +44 1274 65 37 85
E-mail: atlasuk@atlasgmbh.com
www.atlas-cranes.co.uk
www.atlasgmbh.com

150W-EN(1) Effective date: 04/2016. Product specifications and prices are subject to change without notice or obligation. The photographs and/or drawings in this document are for illustrative purposes only. Refer to the appropriate Operator's Manual for instructions on the proper use of this equipment. Failure to follow the appropriate Operator's Manual when u sing our equipment or to otherwise act irresponsibly may result in serious injury or death. The only warranty applicable to our equipment is the standard written warranty applicable to the particular product and sale and Atlas makes no other warranty, express or implied. The only warranty applicable to our equipment is the standard written warranty applicable to the particular product and sale and Atlas makes no other warranty, express or implied. Products and services listed may be trademarks, service marks or trade-names of Atlas GmbH and/or its subsidiaries. All rights are reserved. Atlas® is a registered trademark of Atlas GmbH.
Copyright © 2010 Atlas GmbH.
Ref. no. 6185944

ATLAS SINCE 1919

Wheeled Excavator 150W

www.atlasgmbh.com

ATLAS GmbH
EXCAVATORS
Atlasstraße 6
D-27777 Ganderkesee, Germany
T: +49 (0) 4222 954 0
Fax: +49 (0) 4222 954 220
info@atlasgmbh.com